REV	DESCRIPTION	DATE	APPD
6.0	FCN0313	12/03/12	JG
5.0	FCN0247	05/08/11	JG
4.0	ADDED VIEW - C/N FCN0167	21/03/11	JG
3.0	DRG NUMBERS - C/N FCN0163	07/03/11	JM
2.0	CAGE CODE ADDED	07-02-11	JM
1.0	ORIGINAL	22-09-10	FT

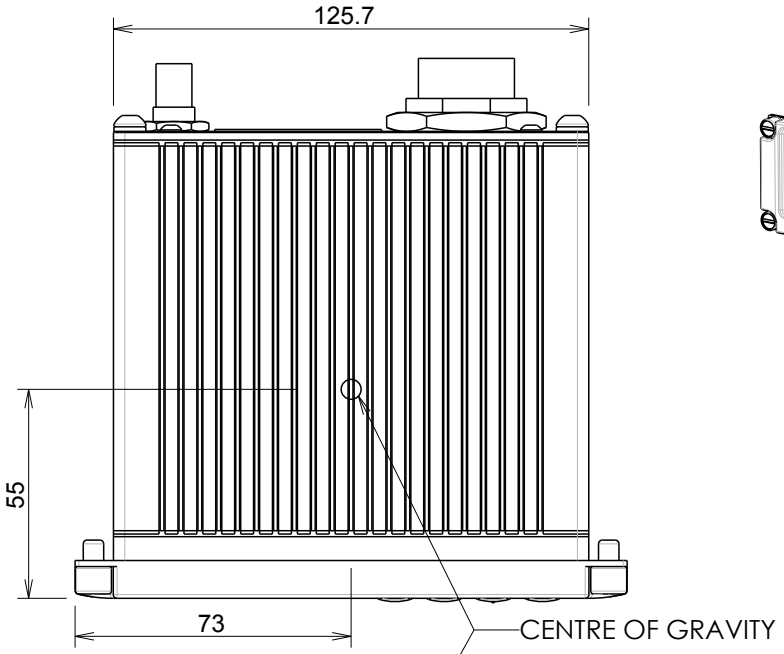

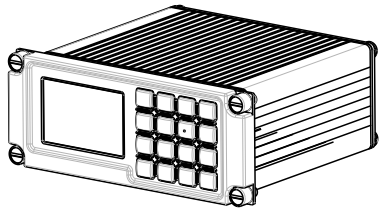

PICTORIAL VIEW

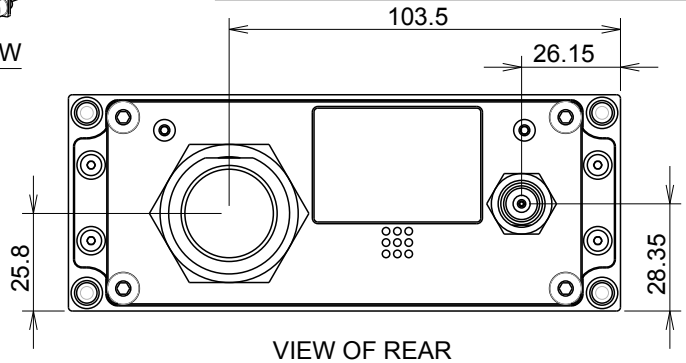

VIEW OF REAR

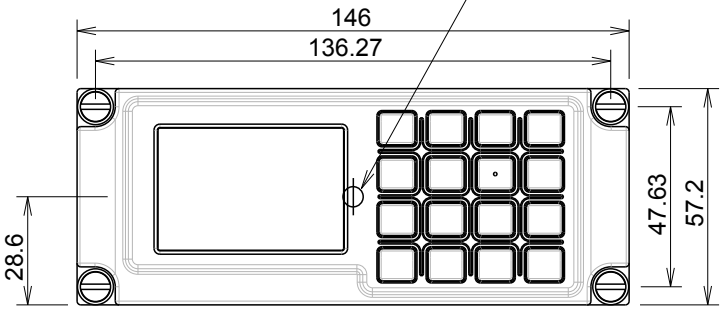

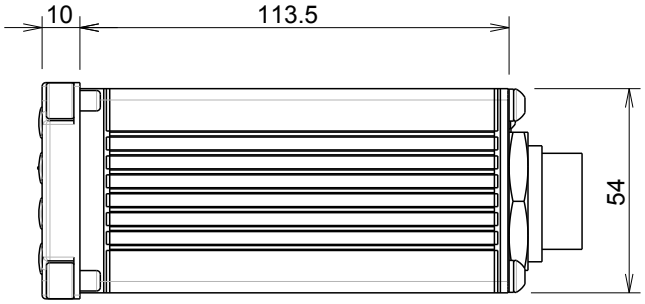

DRAWING APPLIES TO PART No:
DZP_02000 / FCDZM200DIC DZP_02003 DZP_02100 / FCDZM200DIM DZP_02101 / FCDZM2ENDIM DZP_02102 DZP_02103 DZP_02104 / FCDZM2ENDIMB DZP_02105

GENERAL LIMITS (UNLESS STATED)
LINEAR: ± 0.25
HOLES : ± 0.10
ANGLES: ± 1°
ALL DIMENSIONS IN mm.

MASS: 780 grams

DRN: Mark S.
CKD:
APPD:
ISSUED: 22-Sep-10

ORIGINAL SCALE: 1:2
DRAWING SIZE : A4

Flightcell International Limited
PO Box 1481, Nelson, New Zealand
Ph:+64 3 545 8652 www.flightcell.com

DO NOT SCALE OFF DRG
IF IN DOUBT ASK!

DZM2 ASSEMBLY

Flightcell International Ltd. NCAGE E5340

DRG No: DRW_DZP_02_001

SHT 1 OF 1